(A) 40mm

(B) 40mm

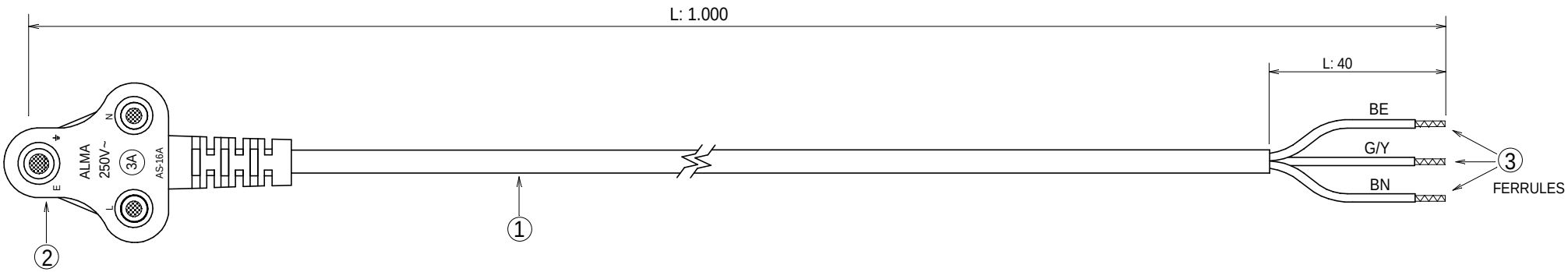

SIDE VIEW

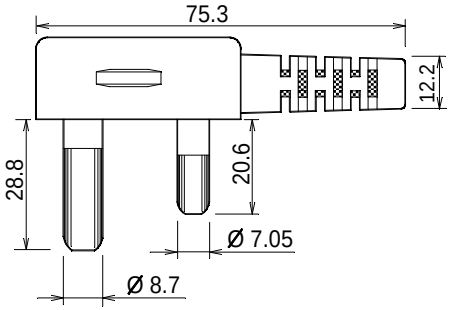

TOP VIEW

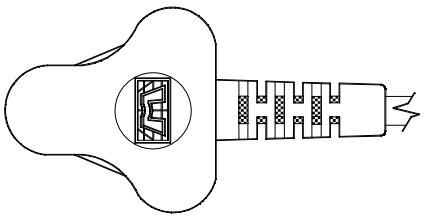

NOTE - DIMENSIONS GIVEN IN MILLIMETRES

APEX LEADS

Manufacturers of all Moulded Plugs and Sockets

	PARTS LIST	PART NUMBER	QTY	TOTAL LENTH m	AL/VE PART No
1	0.5x3 CAB. WE OD5.5	3C0555WE	L: 1.000		
2	16A SA PLUG WE	AS-M6AWE	1 OFF		
3	FERRULES		3 OFF		
4					
5					
6					
7					

Customer	:	MANTECH ELECTRONICS
Product	:	16A- OEF (0.5x3) WE L: 1.000
Your part no.	:	45M0162
Our Part No:	:	AC-MAE6AOEF053WE1
Drawn by	:	K.PAPANTONIOU
Inspected by	:	I. GOUGOUNIS

Revision B	Date 28-11-2008	Approved by